DML Transmitter System Design

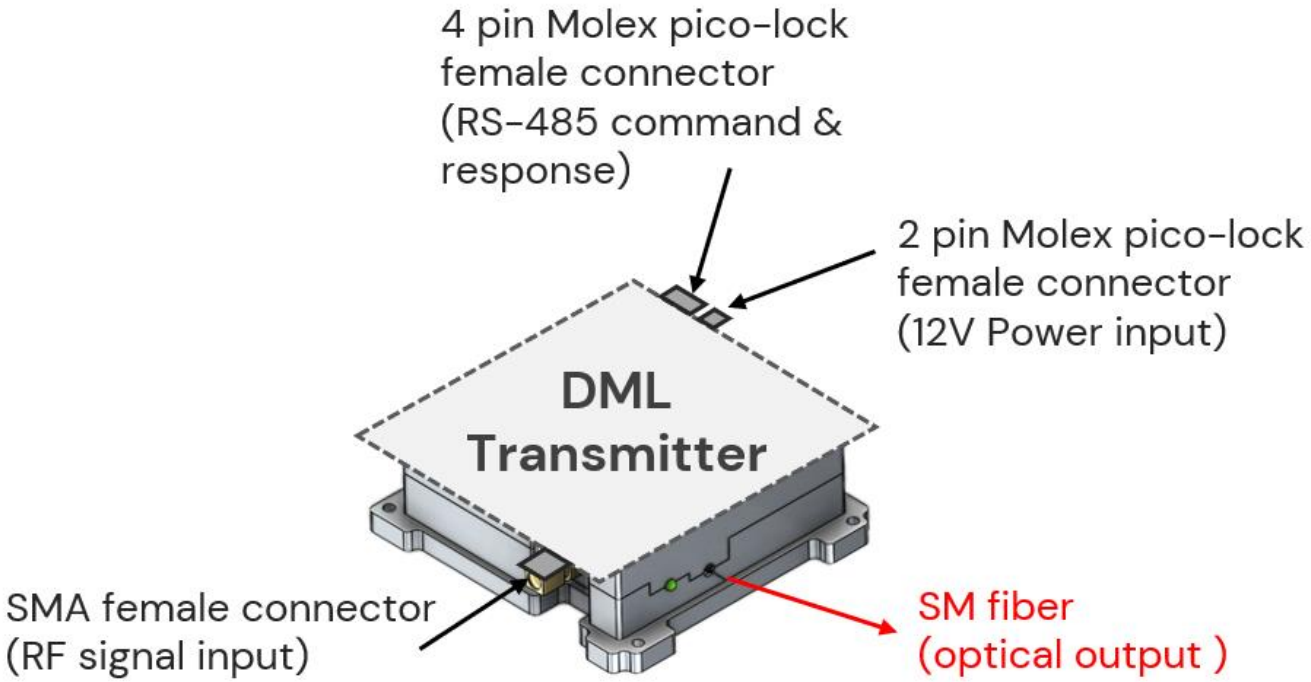

92.7mm (L) x 88.7mm (W) x 30mm (H)

1 Gb/s CubeSat Communication Payload (Transmitter)

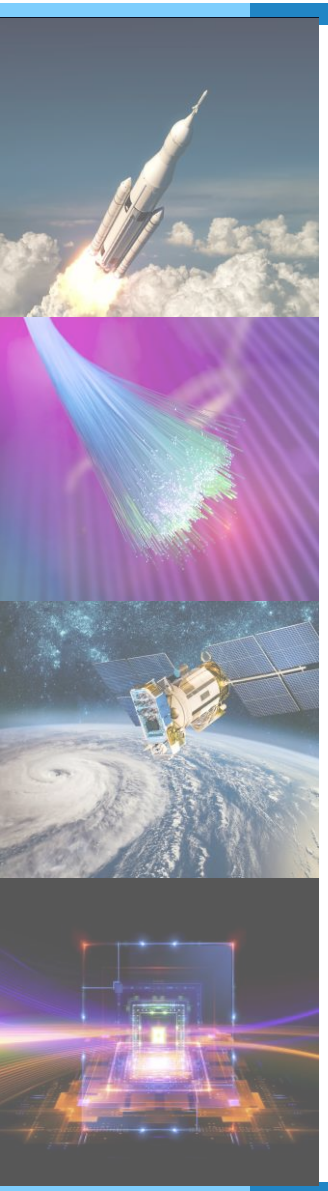

System Diagram

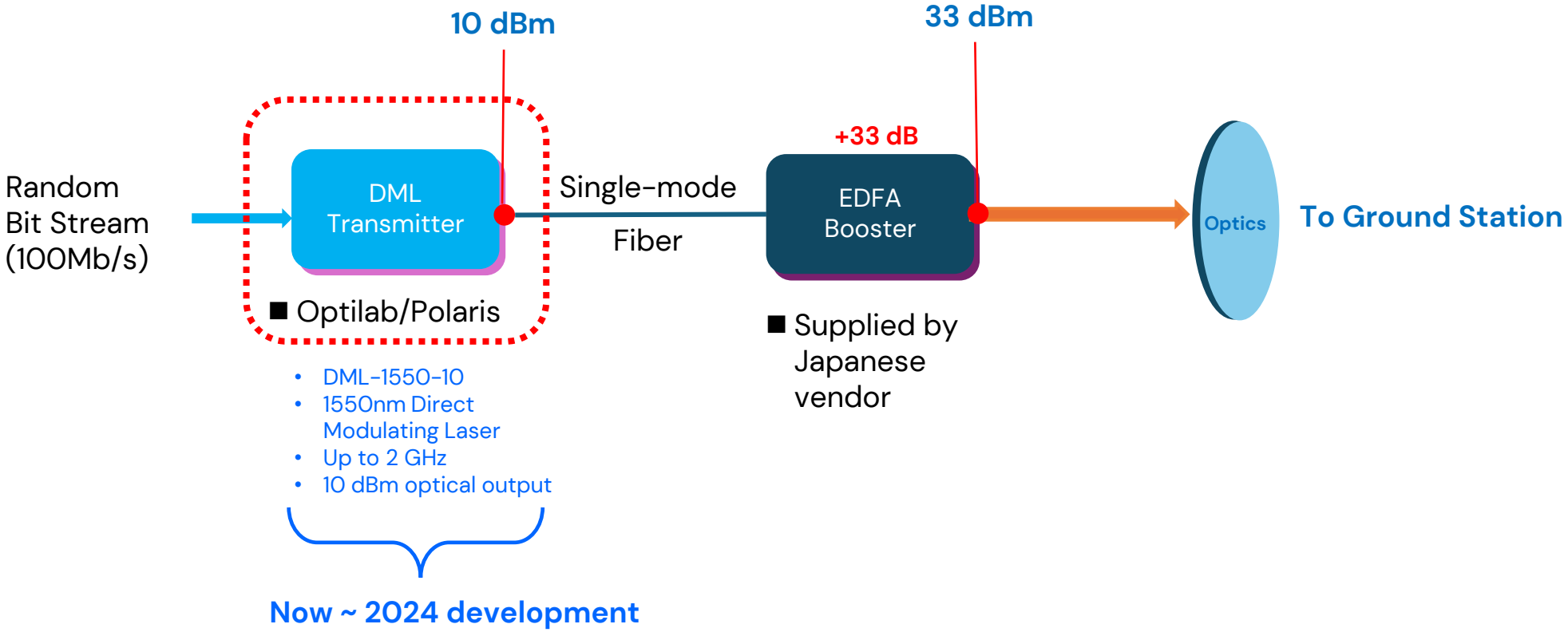

DML Transmitter System Design

Functional Diagram

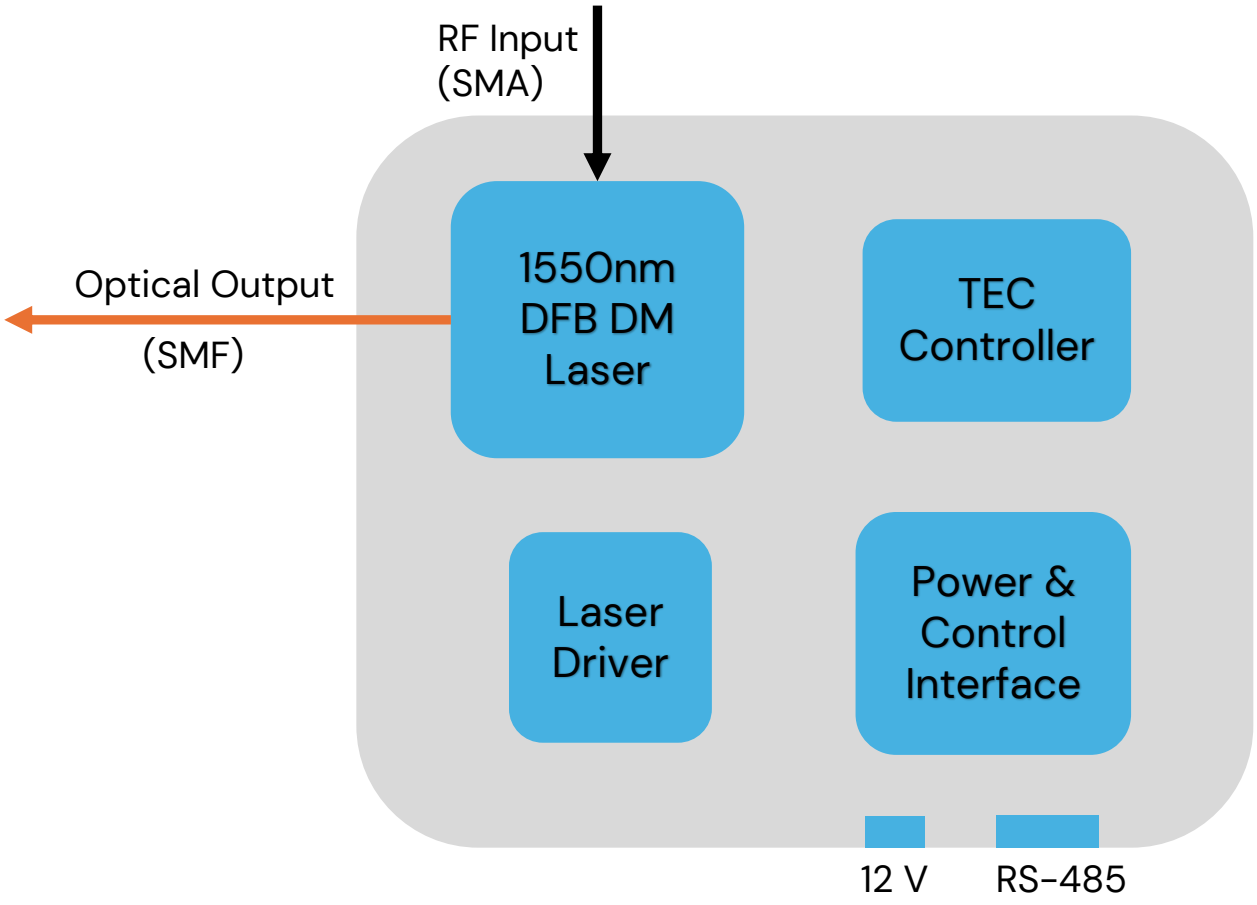

- **RF input:**
  - SMA connector
  - 50 Ohm input impedance
  - RF input, AC 1.5Vpp to 2.0Vpp （Not exceed 2 Vpp）
  - 2 GHz input bandwidth
- **Optical output:**
  - SM fiber output (fused to EDFA)
  - 10 dBm (10 mW) Optical output power (1550nm wavelength)
- **Power Input:**
  - 12V, 500mA (6W)
- **Control Interface:**
  - RS-485(MAX-13847 chip transceiver)

Space requirement: (TBD)

Proprietary and Confidential
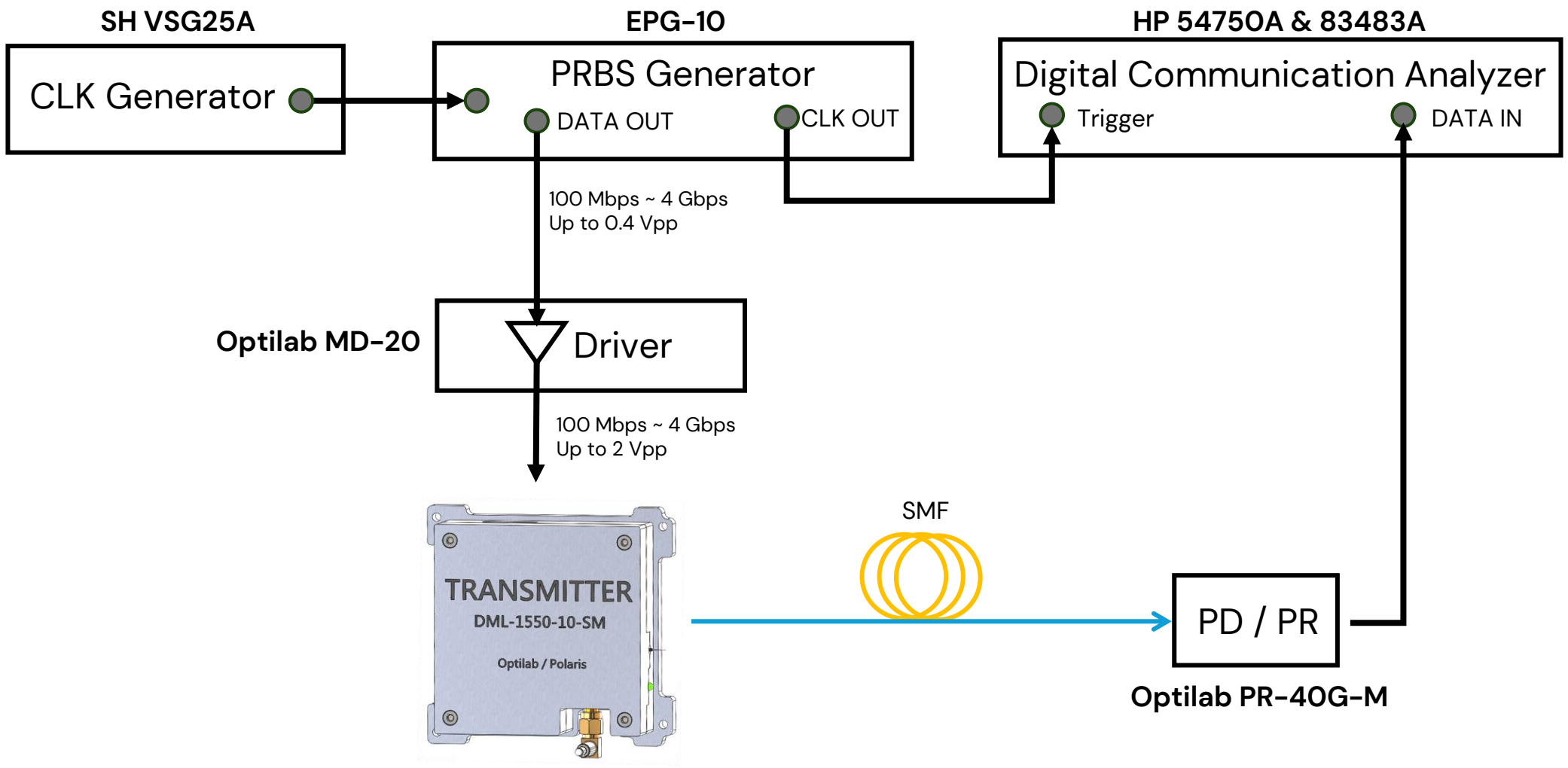
DML Transmitter Function Verification